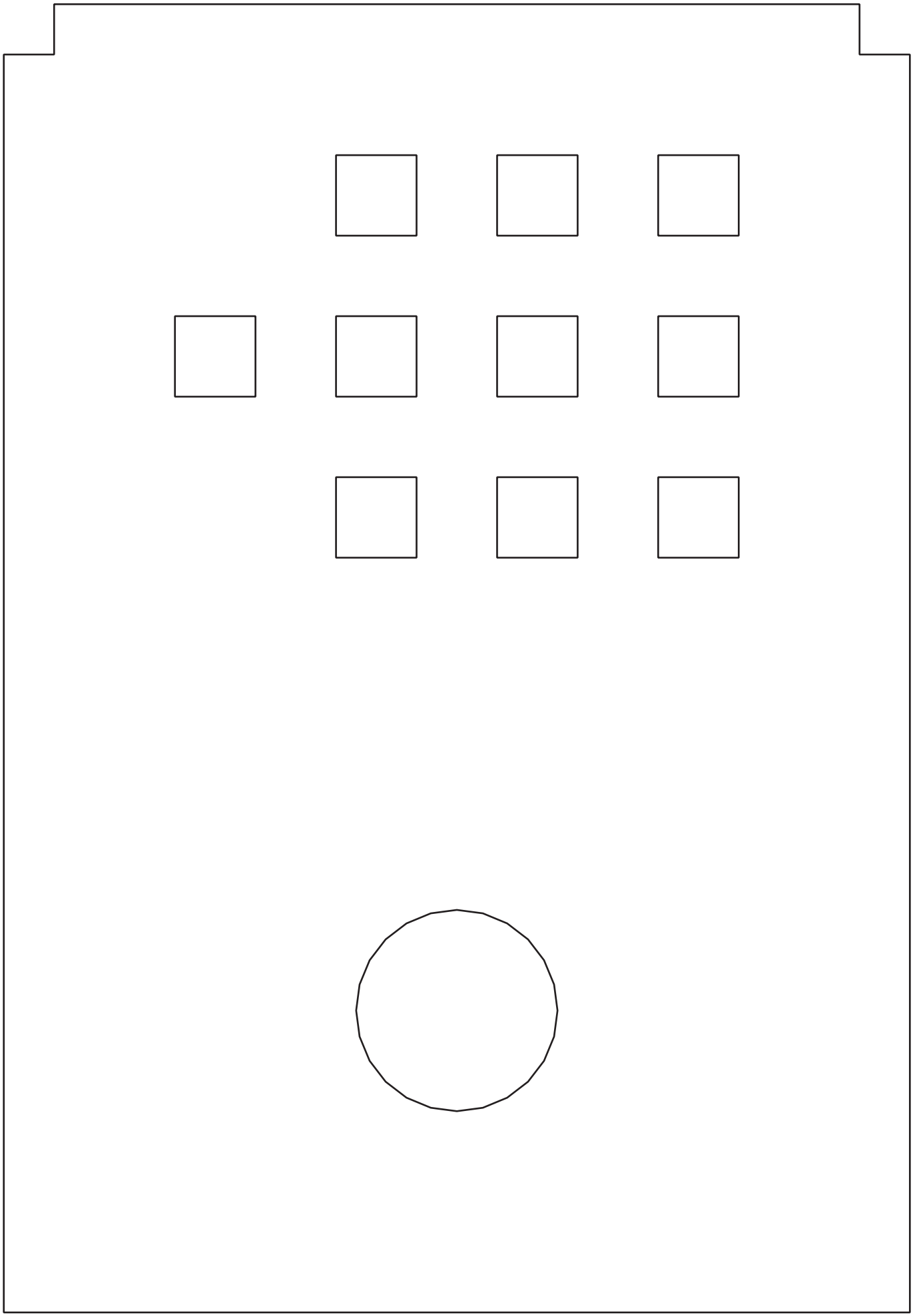

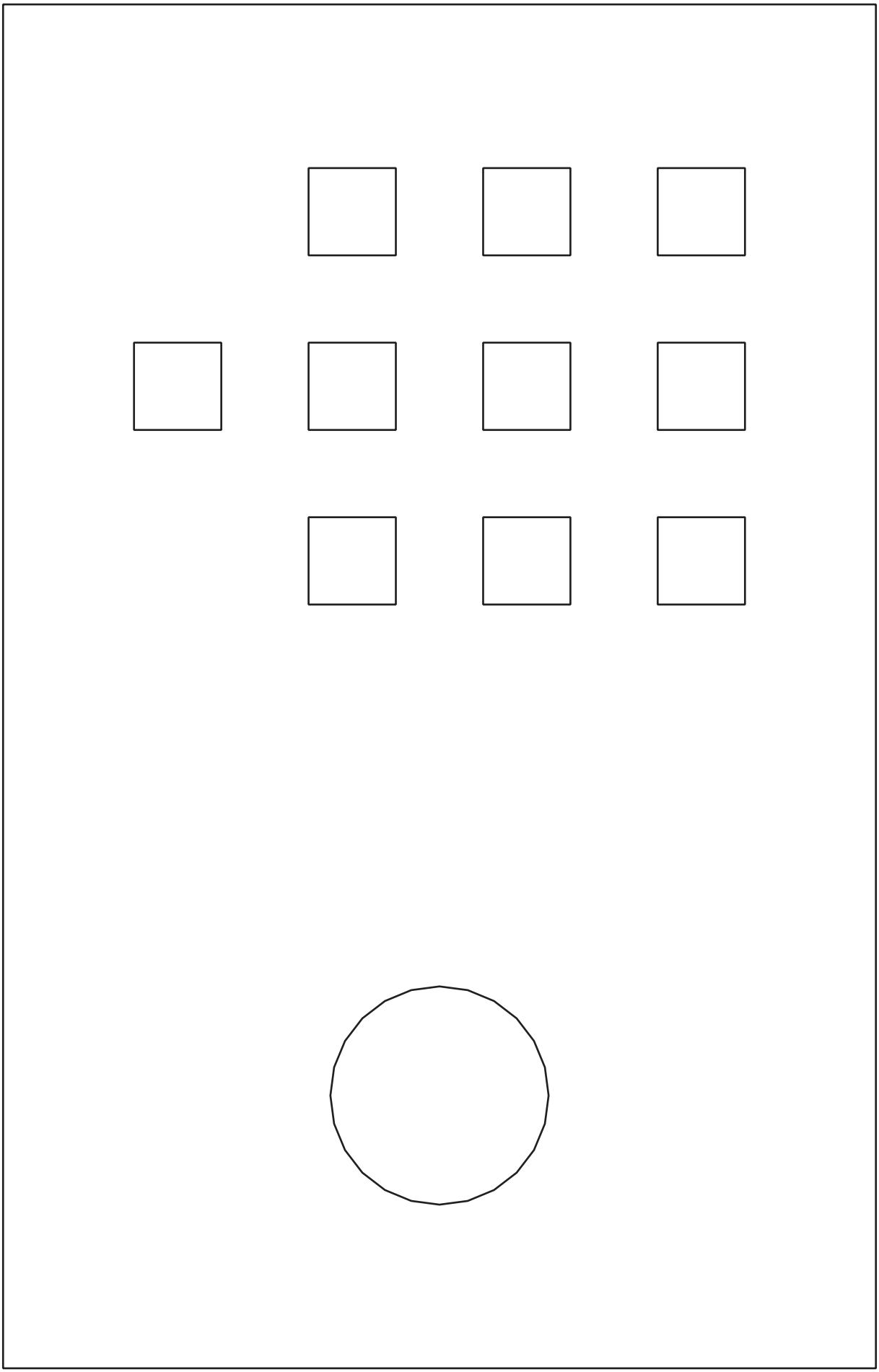

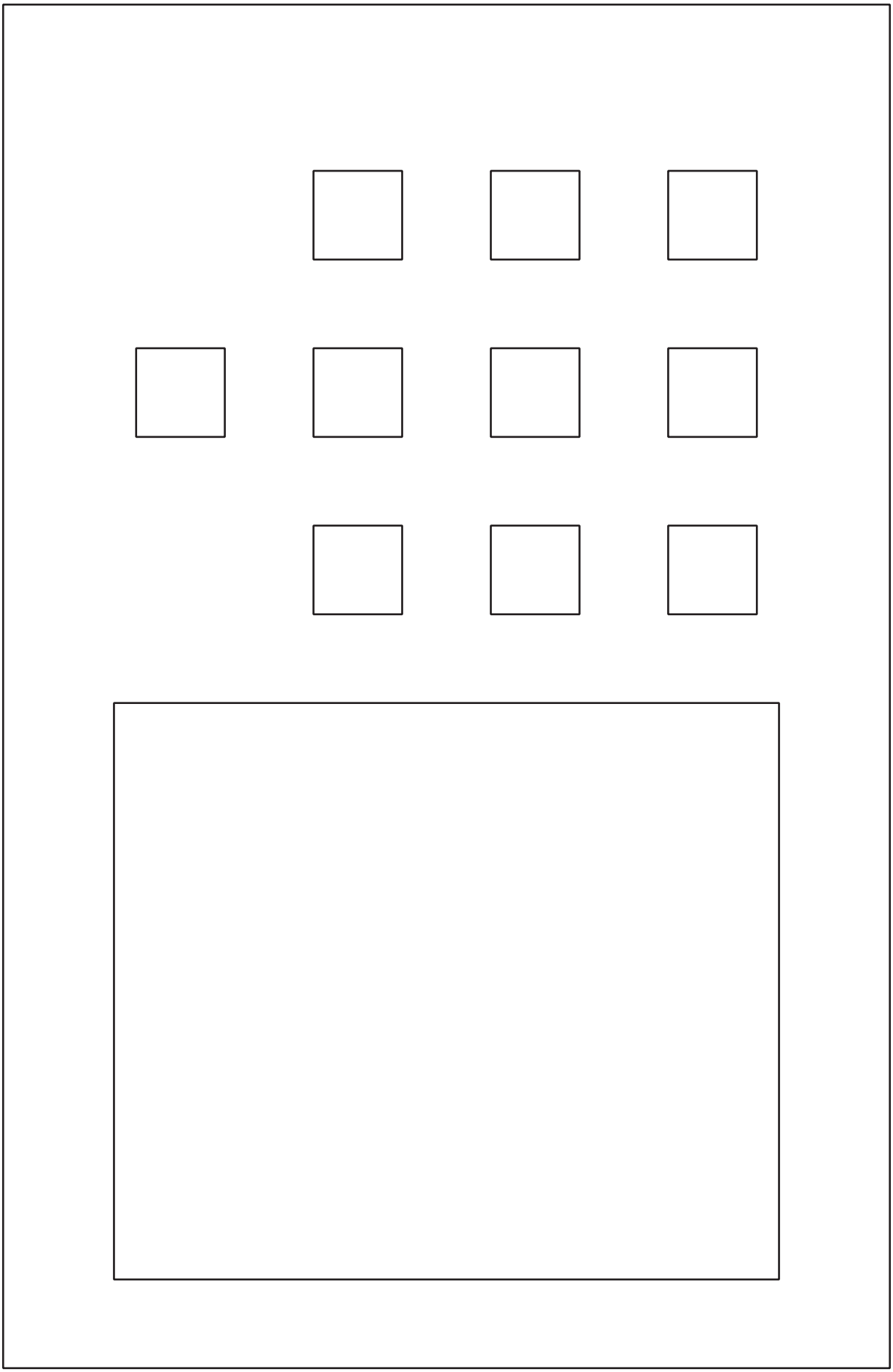

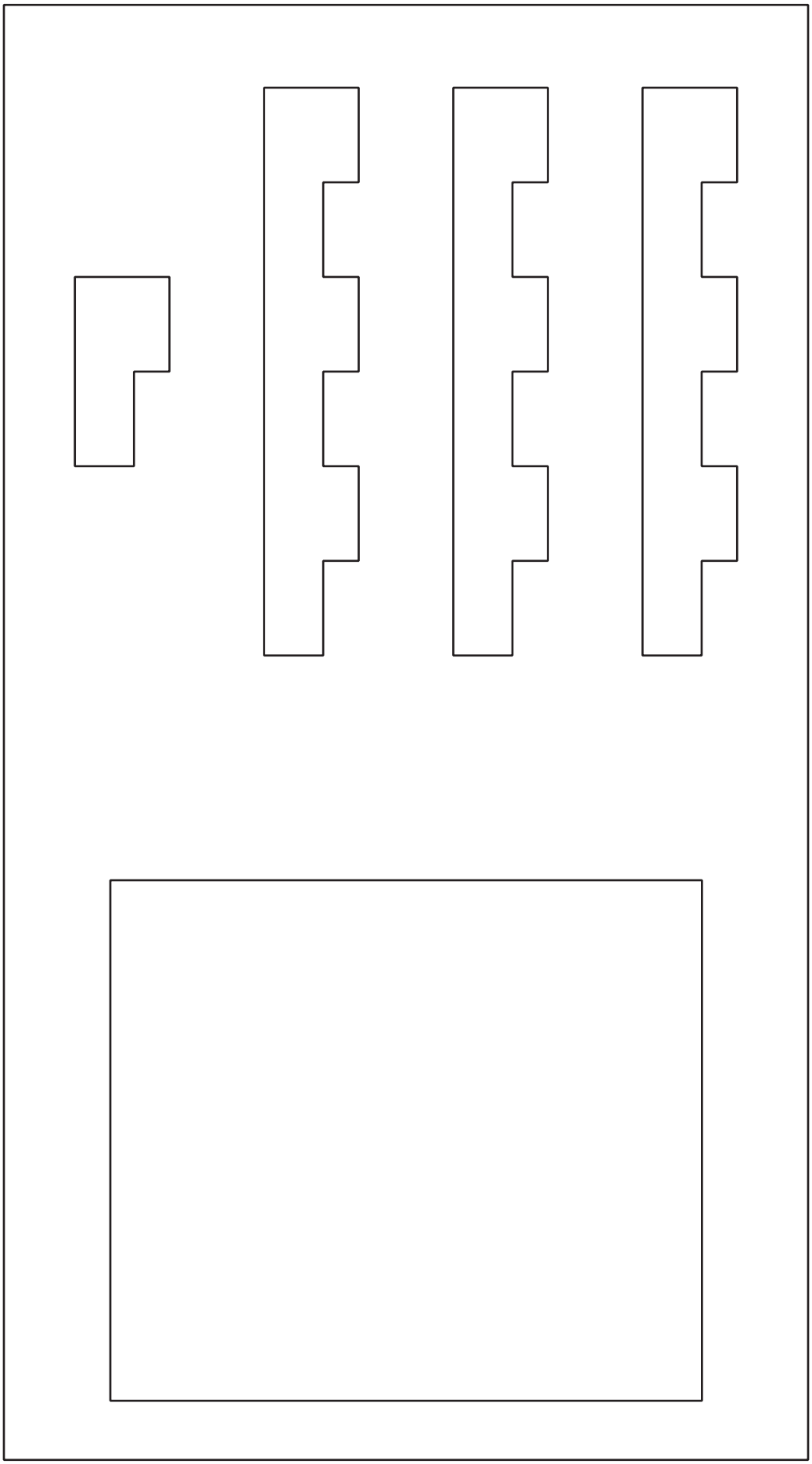

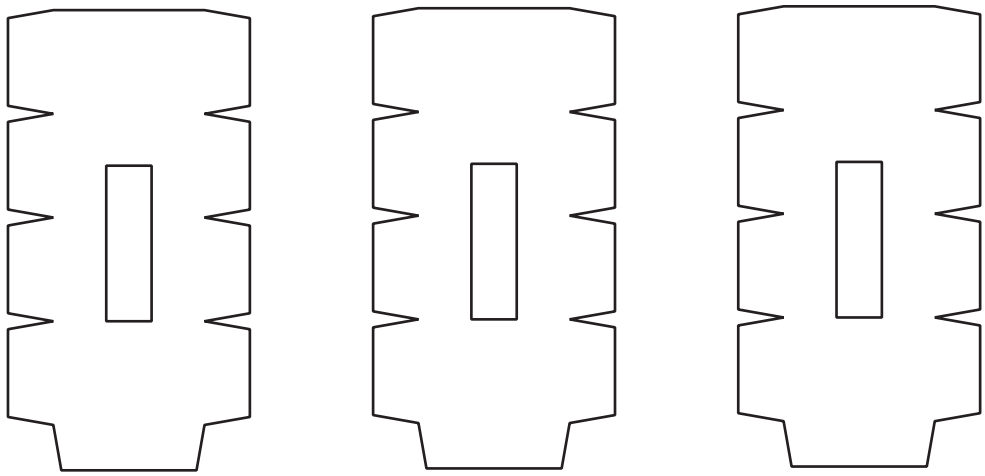

Secret

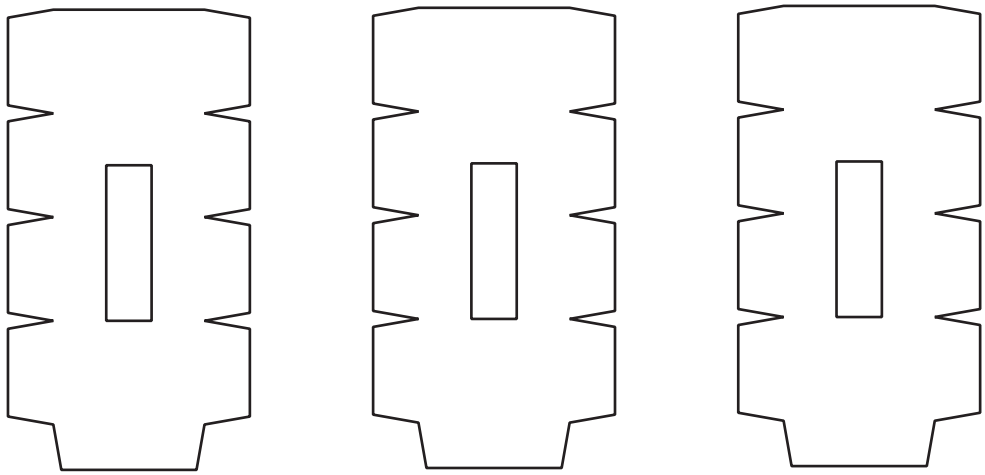

Secret

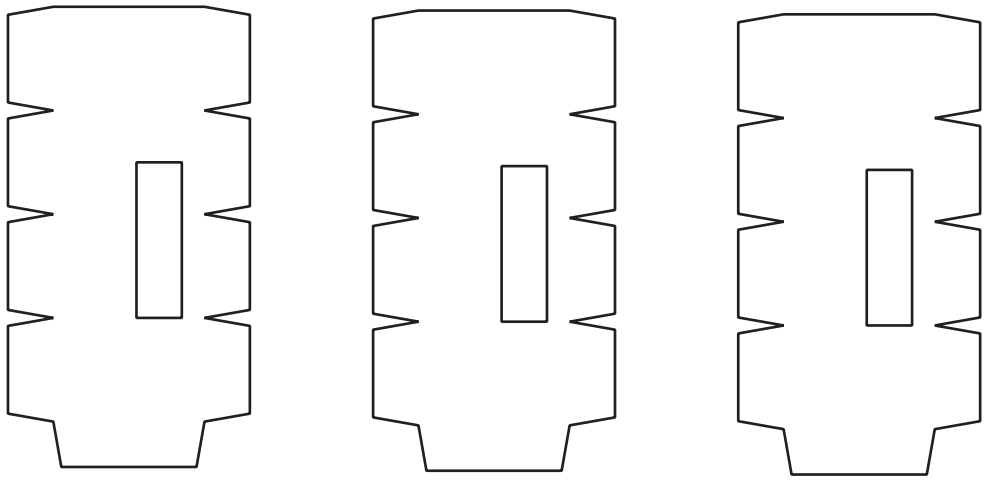

Normal

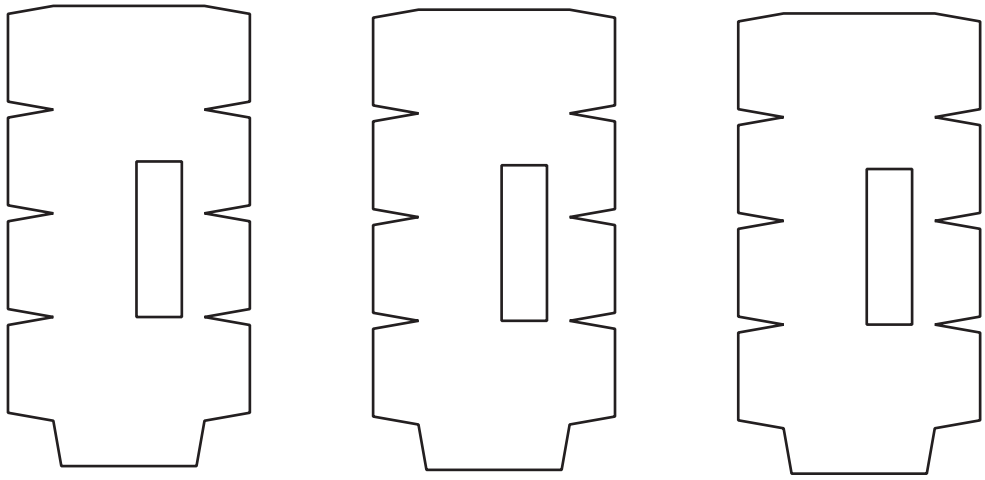

Normal